VISION PROFILE EXTRUSIONS

Sample Approval Form

Customer: Solar Industries
Attention: Carl Shelton
CSR: Helena Botelho

Die #: 15006CC
Description:Vent SH Stile (4000 Series)
Rigid Colour: WH-136
Flex Colour: N/A
Capstock Colour: BLK 3300

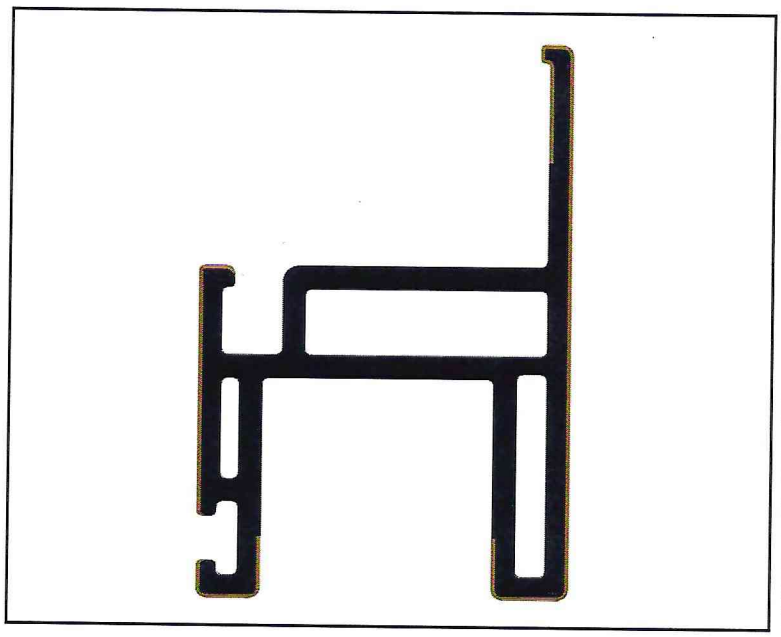

- ☐ Approved
- ☑ Approved with Comments
- ☐ Reject (Please Comment)
- ☐ Re-sample (Please Comment)

Comments: A couple dimensions out of tolerance. Could cause issues when welding sash parts

Customer Signature:

Customer Name: Victor Nguyen
Position: Engineer
Signature: Victor Nguyen
Date: 10/2/25

Vision Profile:

QC Manager: Tri Thai
Plant Manager: Pino Consolmagno

Notes:

(1) Please sign this form and return to your Customer Service Representative. Keep a copy for your records.
(2) Please sign a one foot sample. Return one (1) to your Customer Service Rep. and retain one (1) for your records.
(3) "Approved" indicated that the samples meet all the specifications required for your proper manufacturing and fabrication purposes. An "Approved" Status indicates Customer consent for Vision Profile to anodize and harden the tooling for production.
(4) "Approved with Comments" indicates that the sample does not meet all the specifications required for your proper manufacturing purposes, however, the issues can be addressed before production begins, without the need for re-sampling. Please consult with Vision Profile for any technical support you may need to address these issues.
(5) If samples are rejected, please explain in the comments section.
(6) If re-sampling is required, please explain in the comments section.

REVISIONS		
REV	DESCRIPTION	APPROVED
A1	INT & EXT CAPSTOCK COVRAGE	

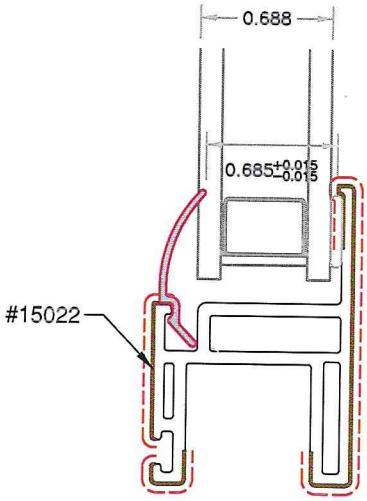

TYPICAL APPLICATION DETAIL
(SCALE 1:1)

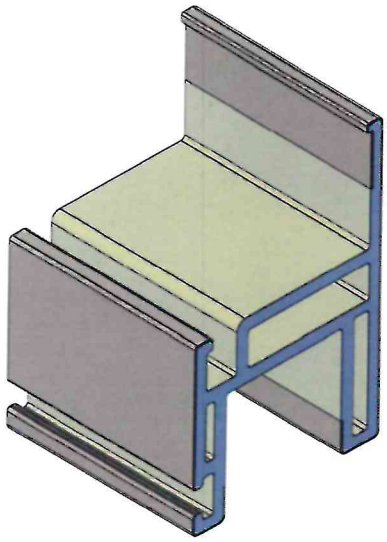

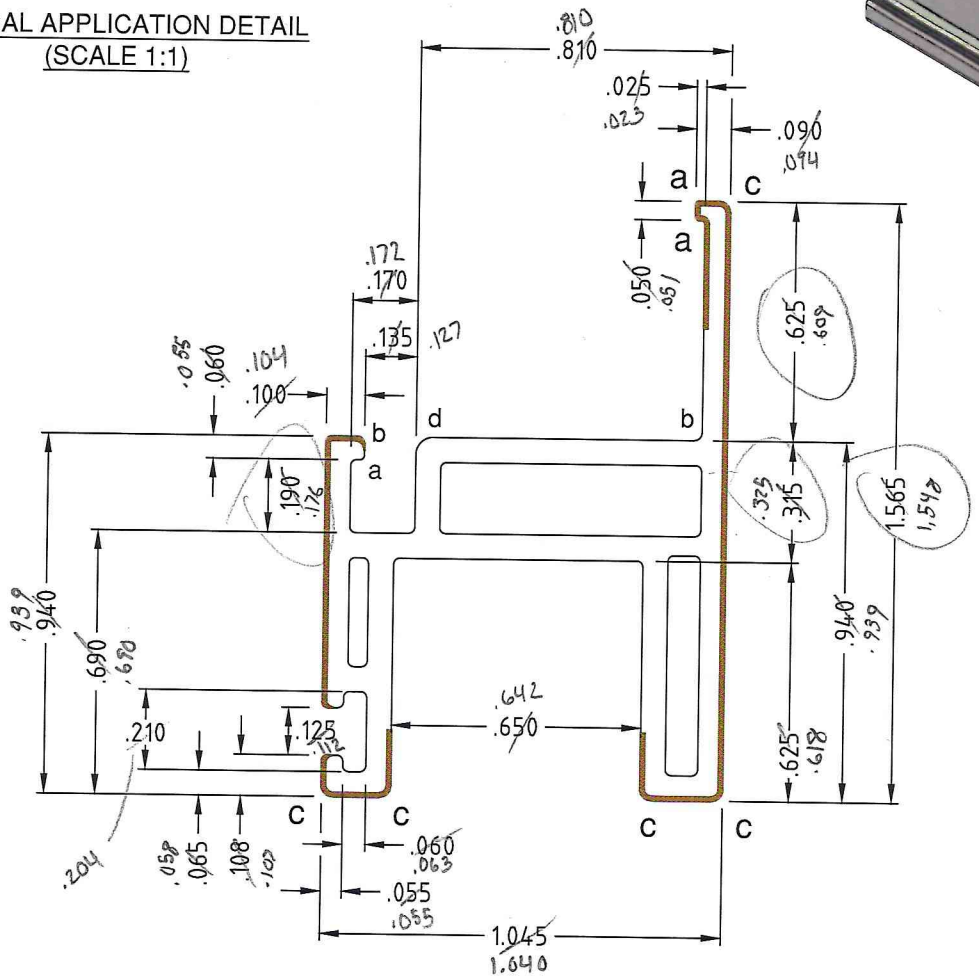

RADII:
a = 0.010"
b = 0.020"
c = 0.030"
d = 0.045"
e = 0.060"
unmarked = 0.015"

WALL THICKNESS:
NOMINAL = 0.065"

CAPSTOCK

VISION PROFILE EXTRUSIONS

This document and the information contained is owned by and proprietary to Vision Profile Extrusions Limited. By receipt hereof, the holder agrees not to use the information, disclose it to any third parties nor reproduce this document without the prior written consent of Vision Profile Extrusions Limited, and agrees to return this document forthwith upon request.

TOLERANCES
X.XX ± 0.015
X.XXX ± 0.010
X.XXXX ± 0.005
DO NOT SCALE DRAWING
ALL DIMENSIONS ARE IN INCHES U.O.S.

CUSTOMER:	VISION PROFILE EXTRUSIONS				
PART:	VENT SH STILE (400 SERIES)				
SIZE: "A"	MATERIAL: RIGID PVC	SUB: 0.333 in²	FLEX: 0.000 in²	CAPSTOCK: 0.035 in²	DATE: 24-02-2025
SHEET: 1 of 1	DRAWN BY: NAS/AW	SCALE: 2 : 1	TOOL NO.: 15006CC	PART NO.: 15006CC	DWG NO.: E801H06CC